MULTICHANNEL TRANSMISSION IN WIRELESS ADHOC NETWORK TO ACHIEVE HIGH THROUGHPUT

M. Arshiya Mobeen (ME), Ms.Anitha Angayarkanni (Assistant Professor)
Department of Computer Science and Information Engineering,
Meenakshi College of Engineering, Chennai, India
aarshiyacool@gmail.com, anitha_s_mani@yahoo.com

***Abstract*—** Wireless technologies and applications are becoming one of the fastest growing and most promising areas in recent years. To accommodate data transmission by multiple nodes, a medium access control (MAC) protocol plays a crucial role in scheduling packet transmission fairly and efficiently. Applying directional antennas in wireless ad hoc networks achieves high spatial multiplexing gain and thus, higher network throughput. But deafness, hidden-terminal, and exposed terminal problems are exaggerated with directional antennas, and they cause the degradation of the overall network performance. In the existing system, a MAC protocol called the dual-sensing MAC (DSMAC) protocol for wireless ad hoc networks is used and it relies on the dual-sensing strategy to identify deafness, resolve the hidden-terminal problem, and avoid unnecessary blocking. This protocol is implemented in single channel transmission.

In the proposed system, distributed multichannel MAC protocol that provides multichannel transmission where the network transmission capacity would be improved by adopting parallel multichannel access. The two problems such as multichannel hidden terminal problem and multichannel broadcast transmission problem, caused by single transceiver operations in the multichannel environment can be solved. The objective of the proposed system is to achieve higher throughput when compared to single transceiver operation.

Index Terms*—MAC Protocol, Deafness, Hidden terminal, Exposed terminal, Transceiver.*

I INTRODUCTION

Advanced wireless communication technologies are extensively investigated and studied in recent years [2], [7], [8]. These studies include related issues of increasing the capacity of transmission, high quality multimedia wireless transmission, quality of service (QoS) and reliability, etc. One of essential issues is medium access control (MAC), which is how to utilize radio spectrum efficiently and to resolve potential contentions and collisions among mobile nodes (or hosts). Using directional antennas, a higher antenna gain can be achieved, which results in a higher data rate, a larger transmission range, and/or a less transmission power. There are many applications using directional antennas. Vehicular networks, for example, are a natural application since the vehicular traffic usually follows a straight line. Millimeter-wave communications also use directional antenna to combat severe path loss[3]. When used in a network, directional antennas can reduce the number of blocked nodes and achieve higher spatial reuse. However, effective medium-access control (MAC) called Dual Sensing Directional protocols [1] that support the directional antenna by facing several challenges. In particular, the hidden-terminal, exposed-terminal, and deafness problems severely affect network performance.

Different from the situation with Omni directional antennas, hidden terminals in networks with directional antennas are located near the source node, as they may not hear the source's transmissions; therefore, they may initiate transmissions, which lead to collisions. Deafness, on the other hand, occurs when a targeted destination does not reply when it is transmitting or receiving at a different direction. If it is not handled, failed transmissions due to deafness might be treated as collisions by the source node. Even worse, the source node may conclude that the destination node is unreachable.

The protocol helps to improve the throughput and delay performance of the wireless networks by minimizing the negative effect of the hidden-terminal, exposed-terminal, and deafness problems. The protocol uses a non interfering out-of-band busy-tone signal combined with sensing the activity on the actual data channel to identify deafness situations and to avoid unnecessary blocking. Using this mechanism, however, the transmission is done in the same channel; a method to broadcast transmissions in the multichannel environment is not mentioned.

On the contrary of the above methods, we propose using a decentralised contention and reservation based ad hoc multichannel protocol (AMP) for supporting multichannel transmissions over MANETs in which each mobile node is equipped with one single transceiver. The AMP has five unique characteristics: (i) AMP is a fully distributed and interactive multichannel transmission protocol, which means that no centralised coordinator; (ii) by adopting AMP, mobile nodes can communicate with each other simultaneously in the multichannel and multi-hop MANET scenario; (iii)

ISSN 2229-5518

AMP employs a multichannel RTS/clear-to-send (MRTS/MCTS) mechanism to lower the collision or interruption probabilities caused by the multichannel hidden terminal problem[6] or nodes' mobility, and thus further enhances the performance of wireless transmissions; (iv) the broadcast problem caused by using one transceiver in a multichannel environment is solved in AMP and (v) AMP can be combined with the channel reservation, channel scheduling, and broadcasting scheme (the combined protocol is named as AMP/s) to enhance the performance of the original AMP protocol.

The remainder of this paper is organised as follows. In Section 2, we describe the existing system. In section 3, we point out some problems and challenges during the designing of a distributed multichannel reservation protocol by using single transceiver in multihop MANETs. Section 4 describes AMP and the enhanced version AMP/s in detail. The processes and results of a series of stimulations we preformed to evaluate the effectiveness of the proposed AMP and AMP/s is presented in Section 5. Finally, we give simulation and conclusion in Section 5.

II Existing System

The DSDMAC protocol uses two well-separate wireless channels, i.e., a data channel and a busy-tone channel. The data channel carries the data packets and the RTS, CTS, and ACK packets on a specified direction. On the other hand, the busy-tone channel will be used to transmit a sine-wave busy-tone signal on all other directions. Only the source and destination nodes will transmit the busy-tone signal ($BT1$ and $BT2$). The protocol assumes that the directions of all reachable destinations or forwarders are predetermined

A. Transmitting and Receiving With DRTS/DCTS

When the link layer of a wireless node receives data packets from its higher layer, it senses the activity on the data channel at the specified direction. If the specified sector is not blocked, the data channel is idle, and no $BT1$ is present, it immediately transmits a DRTS packet and turns on its $BT1$ signal at all other directions. In case a $BT1$ was sensed, other nodes should postpone any DRTS until $BT1$ disappears. Otherwise, the source node waits until the tagged sector is unblocked and becomes idle for the period of a distributed interframe space (DIFS). It then generates a random backoff interval before transmitting its DRTS packet. The backoff interval is randomly chosen between 0 and $CW - 1$, where CW is the initial contention window size. The backoff counter is always frozen whenever the node senses an activity on the data channels at the specified direction or whenever the sector at the specified direction is blocked (e.g., by DRTS/DCTS from other nodes). Once the backoff counter reaches zero, the node transmits its DRTS packet at the specified direction and turns on its $BT1$ signal over all other directions. The source node should change the $BT1$ to $BT2$ after finishing the DRTS packet transmission plus SIFS duration. On the destination side, the receiving node (to which the DRTS packet is addressed) replies after an SIFS period with a DCTS packet at the specified direction and turns on its $BT2$ signal at all other directions. It then waits for the data packet. Once the data packet is successfully received, the destination node acknowledges it by sending a DACK packet at the same direction. After that, it turns off its busy-tone signal.

$BT1$ is used to avoid the hidden-terminal problem. Because DRTS cannot be sensed by the nodes in the hidden terminal area, these nodes can avoid initiating a new DRTS when they sense the $BT1$. $BT1$ can be turned off after the DRTS plus an SIFS because the nodes in Ah can sense the CTS to avoid collision.

$BT2$ is used to solve the deafness problem. When a node is directionally transmitting or receiving, it will not be able to respond to other DRTS. When a source notices a failed DRTS, it should check whether there is a $BT2$ from the receiver's direction. If not, it concludes that there is a collision for the DRTS; otherwise, the receiver is busy in other transmissions. Therefore, if the source node does not receive a DCTS packet within a specified CTS-Timeout interval and it senses a $BT2$, it reschedules the transmission of the packet for a later time (after the busy tone has disappeared) without doubling its backoff CW; if there is no $BT2$, it reschedules the transmission of the packet for a later time and doubles its backoff CW.

Once the source node successfully receives the DCTS, it directionally transmits the data packet. After that, if the source node does not receive a DACK packet within a specified ACK–timeout interval or it detects a transmission of a different packet, it reschedules the transmission of the data packet for a later time and doubles its backoff CW.

IJSER

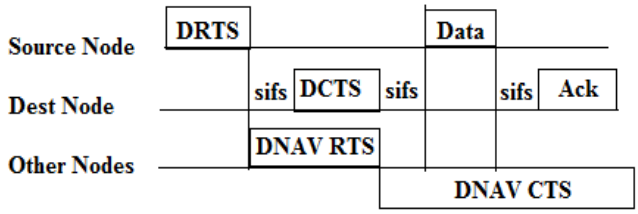

Fig 1 DNAV setting

B. DNAV Mechanism

When a node receives a valid DRTS packet, it should set it's per sector directional network allocation vector (DNAV) timers. It also should block all of its sectors for a period with duration of *SIFS* + *DCTS*, as shown in Fig. 5. We call this time *DNAV*DRTS time. Unless a DCTS packet is received, the node should unblock its antenna sectors when the *DNAV*DRTS timer is expired. If a DCTS packet is received, then only the receiving sector and the sector from which a previously DRTS packet is received (if applicable) should remain blocked for a period with a duration of 2 × *SIFS* + *DDATA* + *DACK*, so the node will not initiate any transmissions to interfere the ongoing transmission. We call this time *DNAV*DCTS time, as shown in Fig.1. Using this DNAV design, we can minimize the exposed-terminal problem without increasing the collision probability. But this protocol is implemented in single channel with wireless devices of mobile nodes that equip one transceiver to transmit or to receive data.

III PROBLEM STATEMENT

A. Challenge Statements

The design of AMP faces certain challenges and constraints that are not imposed on their single channel counterparts.

• ***Single Transceiver Constraint*** — The MAC protocol of IEEE 802.11 DCF is designed for sharing a single-channel between nodes. Most of the present wireless devices of mobile nodes are equipped with one half-duplex transceiver to transmit or to receive data. The transceiver can operate on multiple channels dynamically, but it can only transmit or receive from one channel at a time. This implies that a node cannot communicate with other nodes when it is listening on a different channel from these nodes. Moreover, a single-channel MAC protocol such as IEEE 802.11 DCF will be no longer suitable for the multichannel environment where nodes may dynamically switch channels.

idden Node Problem — The hidden node problem one of the most important issues in multihop NETs. Although the IEEE 802.11 standard vides RTS/CTS control frame to conquer the den terminal problem, nodes may still collide with er nodes unwittingly in other channels since they y equip one transceiver and could not perceive the statuses of other channels. This is a severe problem when designing a multichannel protocol with the constraint on single transceiver. This is because that each node difficultly collects whole channel information within its two hops.

• ***Broadcast Transmission*** — Broadcasting a message to all nodes in a network is an important activity in multihop MANETs. In single channel environment, it's easy to broadcast a packet to all nodes which are within the radio transmission range of the source, since all nodes operate on the same channel. However, in multichannel environment, nodes may miss a broadcast frame when they are transmitting or receiving data in other channels in other data channels. This problem should be solved further.

According to above-mentioned and indicated problem statements, we, then, propose a suitable distributed protocol for MANETs.

IV PROPOSED SYSTEM

Adhoc Multichannel Protocol (AMP)

4.1 Data transmissions

In general, if all mobile nodes are equally allocated to all available channels, the collision probability of each attempted request would be minimised accordingly. Based on the MAC protocol of IEEE 802.11, the sender and the receiver should perform a four way handshaking mechanism: RTS/clear-to-send (RTS/CTS), data, and acknowledgment (ACK) when they have data to transmit in the same channel. If mobile nodes equip with only one transceiver, some nodes will never communicate with each other at the same time. As a result, few data frames will be transmitted in the multichannel environment. If we assign mobile nodes to access channels dynamically, a complicated and distributed channel scheduling mechanism has to be provided for MANETs. It will be more difficult in the MANET.

IJSER

ISSN 2229-5518

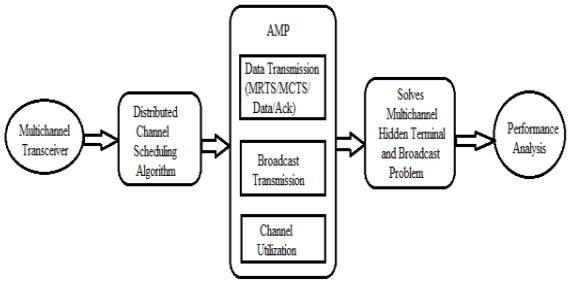

Fig 2 Multichannel protocol System Architecture

Instead of employing such complicated scheme, AMP allocates a dedicated contention or broadcast channel for all mobile nodes to contend. The remaining channels are served as data channels permanently. The architecture of Multichannel transmission is illustrated in Fig 2. Fig.3 illustrates the channel usage of AMP in which channels C1–C2 represent data channels, and channel C0 represents the role of the dedicated contention channel or broadcast channel dynamically. Since there is no stationary node for supporting centralised multichannel control in MANETs, the distributed multichannel protocol, which can provide ad hoc multichannel transmission, is needed. To solve the above-mentioned problems, we employ the concept of IEEE 802.11 RTS/CTS handshaking mechanism to fulfil the multichannel negotiation and transmission mechanism in multi-hop MANETs. We name the RTS/CTS mechanism as MRTS/MCTS in the AMP.

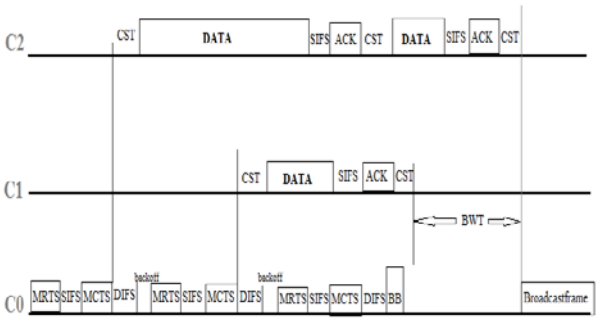

Fig 3 Illustration of proposed AMP, which C0 represents the contention/reservation channel and C1 and C2 represent the data channels

A mobile node has to first complete a MRTS/MCTS handshaking in the contention channel to acquire the access right of the expected data channel if it has a packet to transmit. The purpose of the MRTS control frame is to inform its direct receiver and neighbours the preselected data channel to indicate a virtual carrier sensing delay named network allocation vector (NAV); this will prevent the exposed and hidden node problems in the preselected channel. Likewise, the MRTS also carries the newest status information of data channels to notify other mobile nodes within its transmitting range for information updating. The frame format of MRTS is shown in Fig. 4a where the frame control, receiver address, transmitter address and frame check sequence fields are the same as the description in the IEEE 802.11 standard. In order to be compatible with the IEEE 802.11 standard, we use the reserved value Type 01 and Subtype 0011 as indicated in the frame control field to represent the MRTS control frame. The original duration field is eliminated since the channel C0 is for contention and broadcast use only. Therefore the NAV will not be used in C0 when contending for the channel access. The additional fields selected channel (SC), channel usage indication (CUI) and the nth used channel's offset are described as follows. The SC field indicates which channel that the sender prefers to transmit data with the receiver. The preferred channel (selected) is not compulsory for the receiver depending on the availability of the channel on the receiver's side.

The CUI field length is one octet long and the content of CUI indicates the status of the usage in each channel. Each bit field of CUI represents each corresponding channel in prior order and is called bit map. The left side bit of the CUI indicates a broadcast transmission. The bit will be set to 0 if the corresponding data channel is not in use; the bit will be set to 1, if the corresponding data channel is in use. The following Offset fields are variable depending on the content of CUI field. For example, as shown in Fig. 4, the second bit (channel ID ¼ 1) of CUI is set 1, which signifies that only the first data channel is in currently use and the free time of the first data channel would be the ending time of its transmitted MRTS pluses the value of the Offset. The unit of Offset field is measured in microsecond (ms).

When a node has received a MRTS frame, it will first compare the SC field of the MRTS with its channel status and then check whether it can satisfy the request. If the preselected channel is also available in receiver's side, the receiver will grant the transmission request and reply the MCTS frame back to the sender immediately. The preselected channel cannot be granted otherwise. The receiver then reselects another available channel according to the status of channel usage of the sender. The reselection rules are that if the sender has

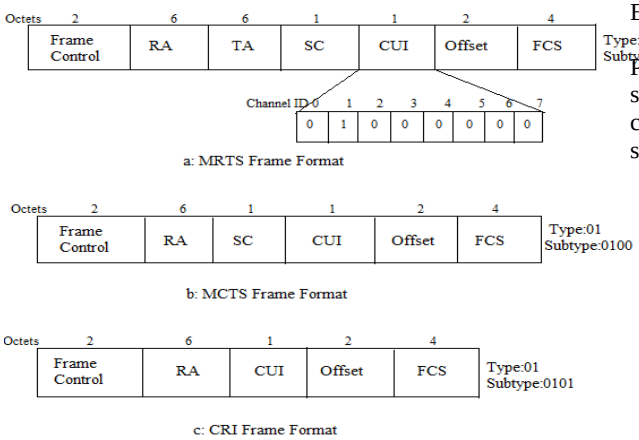

Fig 4 Formats of the MRTS, MCTS and CRI control frames

another free data channel and the channel is also available in the receiver's side, the re-selection commences. Otherwise, the receiver will compare all data channels and select one earliest free channel in both sides. The channel information of both sides is considered in order to prevent the multichannel hidden terminal problem.

After the checking process, the receiver will reply a MCTS frame back to the sender to make the final decision. The MCTS frame contains the final usage status of data channels including the agreed selected data channel information. If the SC is the same as the sender, the handshaking is finished. Otherwise, the agreed SC will be different from the preselected channel indicated by the sender; the sender will issue a CRI control frame.

A node needs to spend an extra channel switching/settling time (CST) when it switches from one channel to another. The CST is defined as the time to change from one operating channel frequency to another channel frequency and is 224 ms long. This time varies from the physical medium dependent entity. In order to avoid other nodes from interrupting transmissions on other channels, nodes that intend to transmit frames must persistently monitor the control channel until the node hears either an MRTS or CRI control frame issued by other nodes. The restriction is to ensure that each sender synchronises to the latest channel information around its radius area before its transmission.

Algorithm for multichannel transmission

```
Procedure GLOBAL_INIT

Init --->Slot time,sifs,difs
Init-->Allocate dedicated contention channel
End Procedure
Procedure MRTS_MCTS
set Init channel  --->contention channel or reservation
channel
set Data channel  ---> All other channel

 if(sender)
        send MRTS;
        set type=01;
        set subtype=0011;
        set SC,CUI;
 if(receiver)
      Receive MRTS;
     check SC and CUI;
 if (SC&CUI)      //channel available
  {
        send(MCTS)
        set type=01;
        set subtpe=0100;
        else
                {
                send CRI;      //channel renewal info
                set type=01;
                set type=0101;
                send SC,CUI info;
                }
 }
  if(neighbour)
        {
                update NAV;
                update SC,CUI;
    }

End Procedure

Procedure BROADCAST
          Init BB;       // Broadcast Beacon
        set type=01;
        set type=0111;
        set CUI=BB;
        if(MRTS_sending_done)
        send BB;
End Procedure

Procedure CHANNEL_SCHEDULING
        load channel fair topology;

        if(less nodes)        // nodes less than or equal to 6
        Continue static channel;

        if(more nodes)        //more than 6
        Continue dynamic channel;

        if(dynamic channel)
        Channel allocation=first_release_first_reserve;
End Procedure
```

4.2 Broadcast transmissions

The broadcast operation is an important activity in ad hoc networks since, for instance, it needs broadcasting to achieve routing information

IJSER

exchanges, address resolution protocol and message advertisement and so on. These broadcast activities can be achieved by either adopting multiple unicast transmissions in network layer or via broadcast mechanism in data link layer. The latter approach will save network bandwidth more efficiently. However, under the constraint of the sole transceiver and the multichannel environment, it is hard to broadcast a frame to all neighbours especially since nodes can transmit or receive data in different channels. To conquer this problem, AMNP uses a designated control frame named broadcast beacon (BB) to announce to its neighbouring nodes of an upcoming broadcast transmission.

When a node has a broadcast frame to transmit, it first checks whether there are some transmission pairs ongoing in data channels simultaneously. If there is no transmission proceeding in data channels, this node, after finishing its back-off countdown, will transmit its broadcast data on the contention channel directly. Otherwise, it will send a BB to its neighbouring nodes for announcement of the broadcast transmission. All nodes, which has now received the BB, will stay in the contention channel and wait for the broadcast waiting time (BWT) duration to receive the broadcast frame even though they may have made a successful reservation. The broadcast transmission is performed in the contention channel in order to let all neighbouring nodes be able to receive it. To ensure that all neighbouring nodes can receive the broadcast frame, the broadcast transmission should be performed when the entire neighbouring nodes are in the contention channel. To do so, the broadcast transmission will be delayed until the neighbouring nodes, which are now transmitting data in data channels, have returned to the contention channel. Although this scheme can guarantee all neighbouring nodes to receive the broadcast frame, the channel resource will inevitably be wasted. To avoid this drawback, we let the broadcast frame be transmitted immediately after a SIFS interval follows the BB frame. As a result, mobile nodes, which have received the BB, will receive the broadcast frame immediately after the SIFS interval.

4.3 Channel utilisation improvement

The throughput of systems can be improved if the degree of channel utilisation is further increased. A simple way to increase the degree of channel utilisation is to adopt channel scheduling scheme. Without losing the simplicity of AMP, we use the first-release-first-reserve strategy to schedule all reservations. We named the AMP with scheduling scheme as AMP/s. The scheduling policies of AMP/s are as follows. If there are available free channels, then randomly select one channel to reserve. If there is no available channel for reservation, the sender chooses the first will-be-released channel to reserve the needed transmission interval.

V. PERFORMANCE ANALYSIS

In this section, we develop the analytical models to quantify the throughput and the delay in a wireless network.

A. Throughput Analysis

Throughput ratio is the number of packet that is received in the particular amount of time.

*Throughput = (received packets*8000 / runtime) bits/sec*

B. Packet Delivery Fraction (PDF):

This is the ratio of total number of packets successfully received by the destination nodes to the number of packets sent by the source nodes throughout the simulation.

$$PDF = \frac{\text{Number of received packets}}{\text{Number of sent packets}}$$

IJSER

VI Simulation model

The simulation is done with the help of NS-2 (v-2.31) network simulator. The implementation of the protocol has been done using C++ language in the backend and TCL language in the frontend on the Fedora operating system

Table 1.Simulation Parameters

Parameter	Values
PHY	DSSS
Transmission range	100 m
Transmission rate	2 Mb/s
Slot time	20 us
SIFS	10 us
DIFS	50 us
RTS frame length	352 bits
CTS frame length	304 bits
ACK frame length	304 bits
MAC Header	272 bits
PHY Header	192 bits

aCWMin	31 slots
aCWMax	1023 slots
Broadcast frame length	128 octets

The single channel throughput is calculated and simulation results are show.

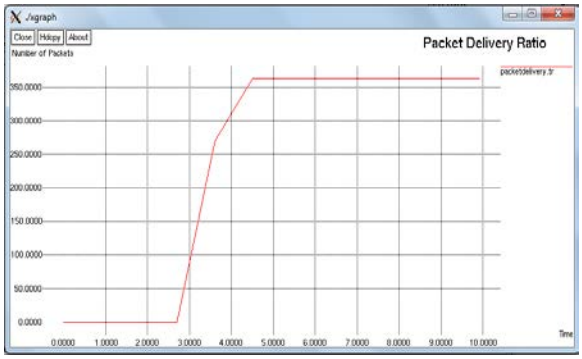

Using the simulator multichannel transmission is simulated and throughput performance is also shown.

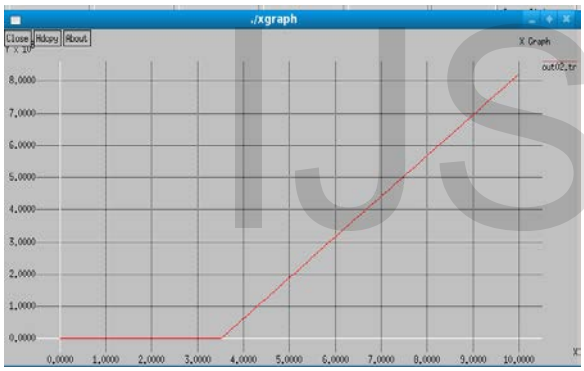

CONCLUSION

With this proposed system, the multichannel transmission in Wireless Adhoc Network is engineered. The distributed channel scheduling algorithm is used to meet the design goals of multichannel environment. This algorithm improves the network transmission capacity by adopting parallel multichannel access schemes. The implemented system is expected to increase the throughput performance.

ACKNOWLEDGMENT

The author would like to thank the anonymous reviewers for their comments and my Project Guide Ms Ms.Anitha Angayarkanni Assistant Professor helped to improve the quality of paper for his constant support and encouragement. The authors are solely responsible for the views expressed in this paper, which do not necessarily reflect the position of supporting

REFERENCES

[1] Abdullah, L. Cai, and F. Gebali, “Dsdmac : Dual Sensing Directional MAC Protocol for Ad Hoc Networks with Directional Antennas”, IEEE Trans , Mar 2012.

[2] Xu S., Papavailliou S., Narayanan S.:‘Layer-2 multi-hop IEEE 802.11 architecture: design and performance analysis’, IEE Proc. Commun., 2004, 151, (5), pp. 460–466.

[3] Abdullah, L. Cai, and F. Gebali, “Enhanced busy tone-assisted MAC protocol for wireless ad hoc networks,” in *Proc. IEEE VTC-Fall*, 2010, pp. 1–10.

[4] E. Shihab, L. Cai, and J. Pan, “A distributed, asynchronous directional to-directional MAC protocol for wireless ad hoc networks,” *IEEE Trans. Veh. Technol.*, vol. 58, no. 9, pp. 5124–5134, Nov. 2009.

[5] P. Wang, H. Jiang, and W. Zhuang, “A new MAC scheme supporting voice/data traffic in wireless ad hoc networks,” *IEEE Trans. Mobile Comput.*, vol. 7, no. 12, pp. 1491–1503, Dec. 2008.

[6] Nasipuri A., Zhuang J., Das S.R.: ‘A multichannel CSMA MAC protocol for multihop wireless networks’. Proc. IEEE WCNC’99, Piscataway, NJ, 1999, vol. 3, pp. 1402–1406.

[7] Chou H.-Z., Wang S.-C., Kuo S.Y., Chen I.-Y., Yuan S.-Y.: ‘Randomised and distributed methods for reliable peerto- peer data communication in wireless ad hoc networks’, IET Commun., 2007, 1, (5), pp. 915–923.

[8] Chen J., Sheu S.-T.: ‘A reliable broadcast/multicast MAC protocol for multi-hop mobile ad hoc networks’, IEICE Trans. Commun., 2006, E89-B, (3), pp. 867–878 E89-B, (3), pp. 867–878.

IJSER